| REV.NO. | REVISION DESCRIPTION | DRAWN / DATE | REVIEWED / DATE | APPROVED / DATE |
|---|---|---|---|---|
| 0 | First issued | OSS/20131219 | MDK/20131219 | LYH/20131219 |
| 1 | Drawing arrangement | KSH/20190510 | KCH/20190510 | KTJ/20190510 |
| 2 | Drawing arrangement | OSS/20190926 | KCH/20190926 | KTJ/20190926 |

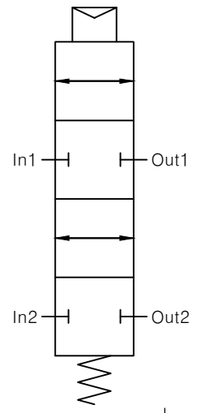


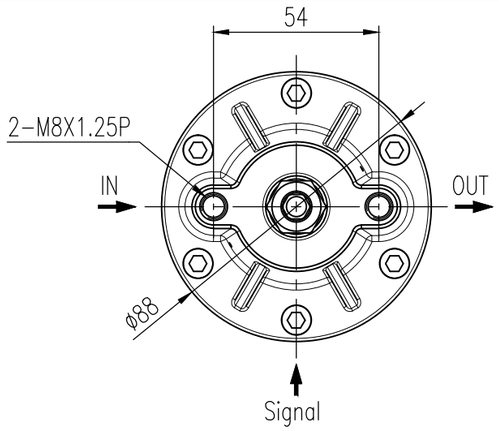


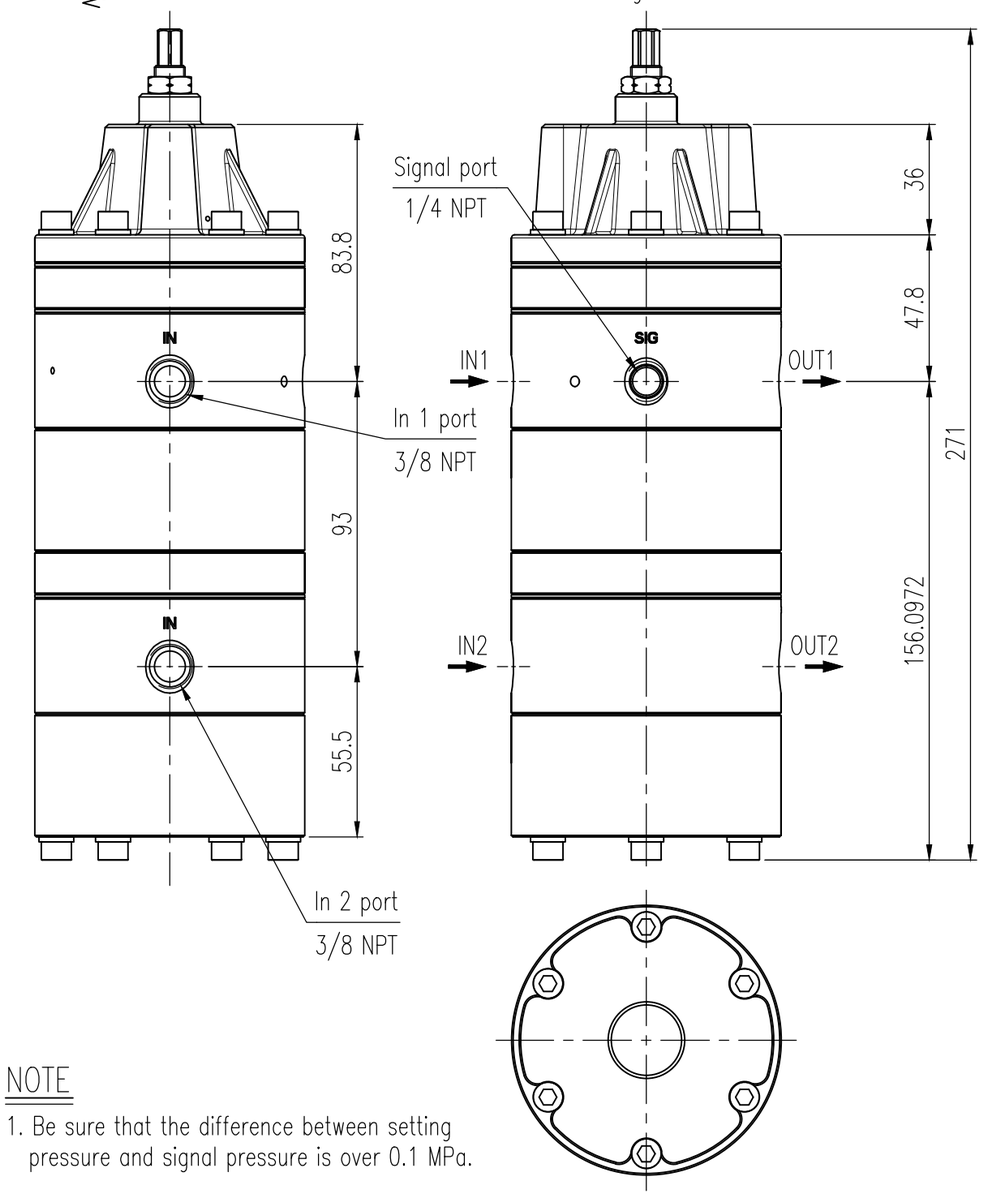


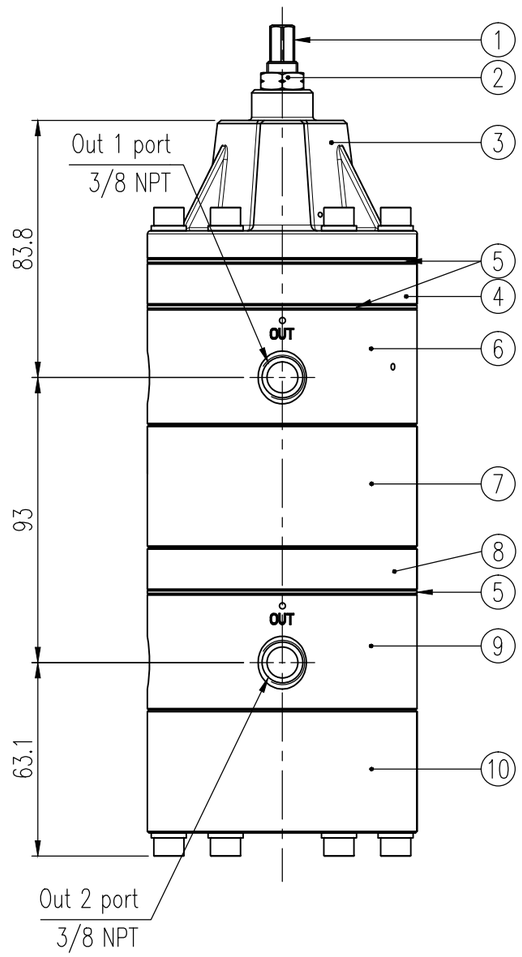


## Specifications

| | | |
|---|---|---|
| Item. type | | YT-435 Double type |
| Max. supply pressure | | Max. 1 MPa (10 bar) |
| Signal pressure setting range | | 0.14 ~ 0.7 MPa (1.4 ~ 7 bar) |
| Hysteresis | | Below 0.01 MPa (0.1 bar) |
| Flow capacity(Cv) | | 1.8 |
| Ambient temperature | Standard | ☐ -20 ~ 70 °C (-4 ~ 158 °F) |
| | High | ☐ -20 ~ 120 °C (-4 ~ 248 °F) |
| | Low | ☐ -40 ~ 70 °C (-40 ~ 158 °F) |
| | Arctic | ☐ -50 ~ 70 °C (-58 ~ 158 °F) |
| Input / Output connection | | 3/8 NPT |
| Signal connection | | 1/4 NPT |
| Housing material | | Stainless steel 316 |
| Weight | | 5.8 kg (12.8 lb) |

| No. | Part name | Material | Q'ty | Remark |
|---|---|---|---|---|
| 1 | Adjust shaft | STS316 | 1 | |
| 2 | Nut (M10x1.0P) | STS316 | 1 | |
| 3 | Base cover | STS316 | 1 | |
| 4 | Exhaust ring-1 | STS316 | 1 | |
| 5 | Diaphragm | NBR | 3 | Standard |
| | | Silicone | 3 | Low/High/Arctic temp. |
| 6 | Exhaust ring-2 | STS316 | 1 | |
| 7 | Base body-1 | STS316 | 1 | |
| 8 | Lower body-1 | STS316 | 1 | |
| 9 | Base body-2 | STS316 | 1 | |
| 10 | Lower body-2 | STS316 | 1 | |

## NOTE

1. Be sure that the difference between setting pressure and signal pressure is over 0.1 MPa.

PROJECT NAME –

| | | | |
|---|---|---|---|
| SURFACE TEXTURE – | PRODUCT NAME Lock up valve | rotork Rotork YTC Limited GIMPO-SI, KOREA | |
| FINISH TREATMENT – | MODEL YT-435D | TITLE Double stainless steel type drawing | |
| MATERIAL – | PROJECTION 3rd / SCALE 1 / 2 | | |
| OTHERWISE NOTE – / GENERAL TOLERANCE – | QUANTITY 1 / SHEET No. 1 / 1 | DRAWING NO. YT-435D-1 | REV. 2 |

2019.01.23

Rotork YTC-A3