SMART POSITIONER PRODUCT MANUAL

TMP-3000

VERSION 1.04

Contents

1. Introduction 4
1.1 General Information for the users 4
1.2 Safety precautions and Manufacturer Warranty 4
2. Product Description 5
2.1 General 5
2.2 Main Features and Functions 5
2.3 Label types and contents 7
2.4 Product Code 8
2.5 Product Specification 9
2.6 Certificate and Approvals 10
2.7 Parts and Assembly (Exploded View) 11
2.8 Exterior Parts and Description 12
2.9 Filter Cleaning 12
2.10 Dimensions 13
3. Installation 14
3.1 Safety 14
3.2 Tools required for Installation 14
3.3 TMP-3000 Installation 14
3.3.1 TMP-3000 Installation Example 14
3.3.2 Installing 15
3.3.3 Warning 17
4. Pneumatic Connections 18
4.1 Safety 18
4.2 Supply Pressure Condition 18
4.3 Piping Condition 18
4.4 Piping Connection of the Positioner and Actuator 19
4.4.1 Single Acting Actuator 19
4.4.2 Double Acting Actuator 19
5. Power Connection 20
5.1 Warning 20
5.2 Terminal Connections 20
6. Auto Calibration and How to Operate 21
6.1 Warning 21
6.2 Button Description 21
6.3 Run Mode (RUN) 21
6.4 Auto Calibration Mode (AUTO CAL) 22
6.4.1 Auto 1 Calibration Mode (AUTO1) 22

6.4.2 Auto 2 Calibration Mode (AUTO2) 22
6.5 Manual Mode (MANUAL) 23
6.6 Parameter Mode (PARAM) 23
6.6.1 Dead-Zone (dEAdZONE) 24
6.6.2 PT1, PT2 Values 24
6.6.3 ESR1, ESR2 Values 24
6.6.4 PR1, PR2 Values 25
6.6.5 PERIOD Time (PERIOD) 25
6.7 Hand Calibration Mode (CALIb) 25
6.7.1 Input Signal Selection (SEL IN) 26
6.7.2 Zero-Point (PV_ZERO) and End-Point (PV_END) 26
6.7.3 Zero-Point (TR_ZERO) and End-Point (TR_END) 26
6.7.4 Normal/Reverse Feedback Signal (TR NORM / REVS) 27
6.8 Valve Mode (VALVE) 27
6.8.1 Acting Adjustment (ACT RA / dA) 28
6.8.2 Characteristic Adjustment (CHAR) 28
6.8.3 User defining flow Characteristics (USER SET) 28
6.8.4 Tight Shut Open (TSHUT OP) 30
6.8.5 Tight Shut Close (TSHUT CL) 30
6.8.6 Custom Zero Setting Mode (CST ZERO) 30
6.8.7 Custom End Setting Mode (CST ENd) 31
6.8.8 Single and Double Acting Adjustment (SINGLE / dOUBLE) 31
6.9 INFO Mode (INFO) 32
7. Error and Warning Code 33
7.1 Error Code (Error code) 33
8. LCD Operating Order 35

1. Introduction

1.1 General Information for the users

Thank you very much for purchasing our products. Our products are manufactured, inspected and delivered in uniform quality with strict regulations at the factory. To use this product correctly and efficiently, please read this manual carefully before installing and using the product.

- The manual should be provided to the end-user.
- The contents of this manual are subject to change without prior notice. Product specifications, designs and parts are not immediately reflected in the manual when they are changed, but are reflected in the next revision.
- The meaning of the valve original point (Zero) in this manual is the position of the valve when the air pressure is completely out of positioner OUT1. That is, in the case of the linear direct acting type actuator, the stem of the actuator is raised when the air pressure is completely released from the OUT1 of the positioner. In the case of the linear dynamic type actuator, when the air pressure is completely released from the OUT1 of the positioner, the stem of the actuator comes down and this is called original point (Zero).
- This manual cannot be reproduced or reused for any purpose without our approval.
- If any problem arises that is not described in this manual, please contact us immediately.
- This product is an accessory device of control valve. Be sure to read the instruction manual of the corresponding control valve before starting operation.

1.2 Safety precautions and Manufacturer Warranty

- When handling this product, for the protection and safety of the operator, the product and the system in which the product is installed, should follow the safety instructions mentioned in this manual. If you do not follow the safety instructions in this manual correctly, we cannot guarantee the safety of the operator.
- Any changes or repairs to the product are allowed only when described in this manual. If any changes or modifications are made by the customer, we will not compensate for any personal or material damage that may occur. If you need to change or modify the product, please contact us.
- The warranty period of the product is 18 months based on the date of shipment unless stated otherwise.
- If any misuse, accident, alteration, modification, manipulation, negligence, improper installation, improper maintenance, repair, maintenance or service, or model or serial number change, manipulation, Damage, disasters, power surges, or serious damage

are not covered by the warranty.

- Please contact us for further information on product warranty.

2. Product Description

2.1 General

The TMP-3000 Smart Positioner not only precisely controls the valve opening according to the current signal of 4 ~ 20mA DC input from the controller or the central control room, but also performs the auto calibration by the computation action of the built-in high performance microprocessor and PD control. It is a highly reliable positioner that performs various powerful functions such as optimum control.

2.2 Main Features and Functions

- In case of Fail Freeze optional product, it maintains the current valve position without any additional equipment such as lockup valve or solenoid valve in case of input signal and pneumatic failure.
- Back light function LCD is attached so you can check the status of the positioner directly in the field.
- Four adjustment buttons and unique functions of the buttons are applied in the same way throughout the firmware, so it is very easy to use.
- The initialization time is very short, which minimizes the change of valve stroke in case of temporary power failure and improves system stability.
- Very strong against vibration and can be used in extremely high vibration areas.
- The change in supply pressure during use has almost no effect on the adjustability of the positioner.
- Auto calibration is very simple, so first time users can handle the product easily.
- Compact size makes it easy to attach to small actuators.
- Very low air consumption which allows large plants to reduce their operating costs.
- The valve system can be stabilized by outputting an analog feedback signal.
- Variable valve flow control characteristics such as Linear, Quick Open, Equal % can be changed.
- It is possible to implement special flow control characteristics by specifying 16 points at user's discretion.
- You can minimize valve leakage by setting the sealing function of Tight Shut-Off / On.
- Half-interval control (Split Range) is available such as 4 ~ 12mA and 12 ~ 20Ma.
- You can change Zero and Span freely through Hand Calibration function.
- By manual operation, valve can be operated arbitrarily irrespective of input signal, so

it is easy to judge whether or not there is an abnormality of valve.

- Ingress protection of IP67.
- The product's enclosure is made of a material with excellent chemical resistance and moisture resistance, so it can be used stably for a long time even in a corrosive atmosphere.
- The internal structure is very simple and modular, so there is little possibility of failure and maintenance is simple.
- It is equipped with a foreign material prevention filter which is easy to maintain.
- Flow rate can be selected according to actuator size.
- Solenoid valve with superior durability of over 200 million cycles.
- Non-contact potentiometer has permanent wear resistance.

2.3 Label types and contents

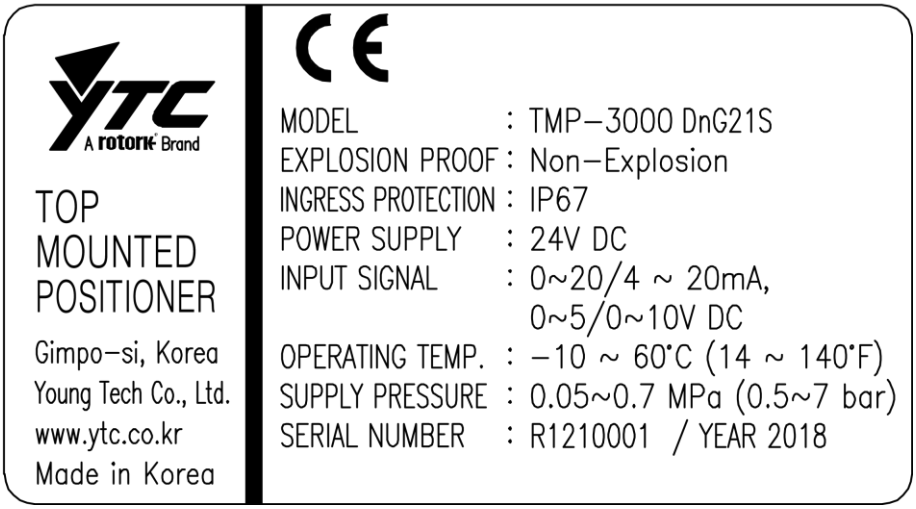

Fig. L-1 : TMP-3000 Label

- MODEL : The basic model name of the product is indicated.
- EXPLOSION PROOF : Indicates certified explosion proof grade.
- INGRESS PROTECTION : Indicates IP protection level.
- POWER SUPPLY : Indicates the supply power applied to the product. 24VDC ± 10%
- INPUT SIGNAL : The range of the input current signal is indicated.
- OPERATING TEMP. : The ambient temperature range in which the positioner can operate is indicated.
- SUPPLY PRESSURE : Indicates the range of pneumatic pressure supplied to the positioner.
- SERIAL NUMBER : The unique serial number of the product.
- YEAR : Indicates the year of manufacture of the product.

※ Precautions

Be careful not to apply volatile solvent (hardener of instant adhesive, acetone, WD-40, etc.) to the sticker nameplate. Printed contents may be erased.

2.4 Product Code

TMP-3000 | 1 | 2 | 3 | 4 | 5 | 6 |

1	Pneumatic Output	S :	Single Acting (Single)
		D :	Double Acting (Double)
2	Explosion Protection	N :	Non-Explosion
3	Conduit – Pneumatic Connection	G :	M16*1.5P - G1/8
4	Flow Capacity	1 :	20LPM
		2 :	50LPM
5	Options	0 :	None
		1 :	Internal Position Transmitter
6	Fail Option	F :	Fail Freeze
		S :	Fail Safe

2.5 Product Specification

Model	TMP-3000
Acting Type	Single / double
Power supply	24V DC ±10%
Input Signal	0~20mA / 4~20mA / 0~5V / 0~10V
Power Consumption	<4W
Output Signal	4~20mA (DC 9~28V)
Fail Option : Power / Air	Current Position (Freeze), Move to safe position (Safe)
Supply Pressure	0.05~0.7MPa (0.5~7bar)[1)]
Flow Capacity : 0.6MPa Supplied	20LPM / 50LPM
Air consumption	0 LPM
Filtering Size, particle size	5 Micron
Air Connection	G1/8 (Ø6mm Tube)
Operating Temp.	-10~60°C (14~140°F)
Conduit	2-M16×1.5P
Stroke	5~40mm
Ingress Protection	IP67
Vibration	100Hz @ No resonance up to 6G
Body Material	PPS
Cover Material	PC (Tansparent)
Weight	820 g (1.8 lb)

⚠ The above specifications are based on an ambient temperature of 20 ° C, an absolute pressure of 760 mmHg, and a relative humidity of 65%.

For inquiries about information which is not included in the standard specifications, please contact us.

[1)] Supply pressure should be more than 0.05 ~ 1MPa than minimum pressure for operation of valve actuator.

2.6 Certificate and Approvals

- **Electromagnetic Compatibility (EMC)**
  - EMC directive 2014/30/EC from April 2016
  - EC Directive for CE conformity marking

2.7 Parts and Assembly (Exploded View)

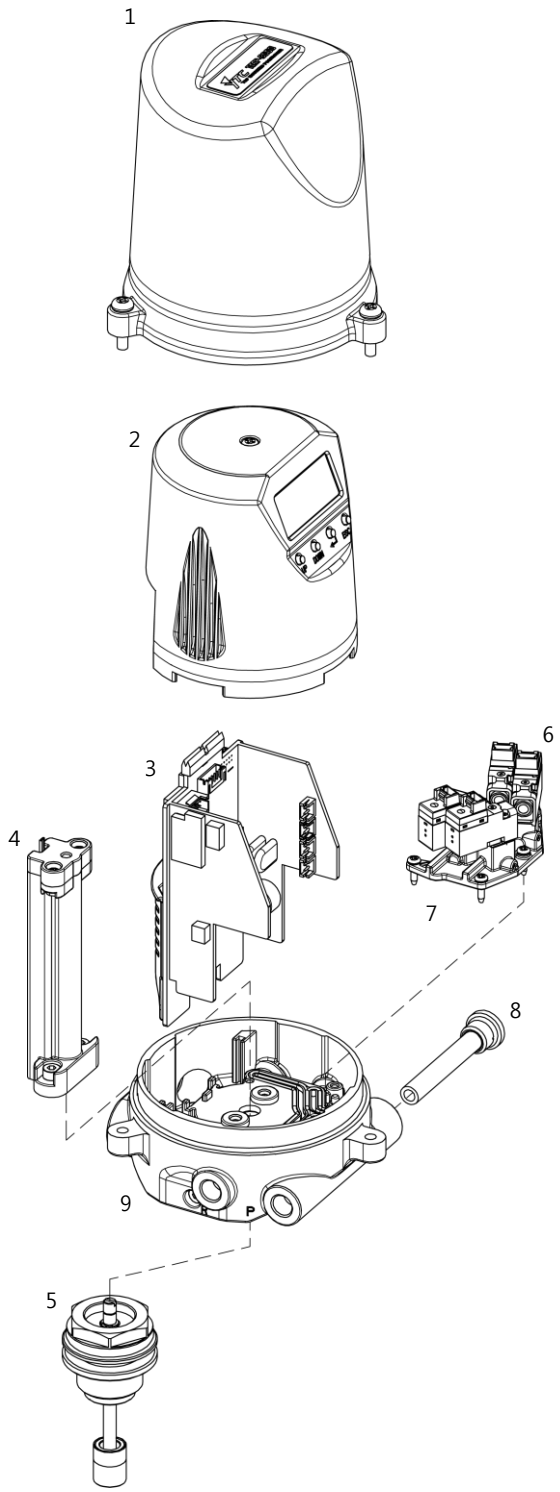

Fig. 2-1: TMP-3000 Exploded View

1. Base Cover
2. PCB Cover
3. Main PCB
4. Potentiometer
5. Feedback Shaft
6. Solenoid Valve
7. Manifold
8. Filter
9. Base Body

2.8 Exterior Parts and Description

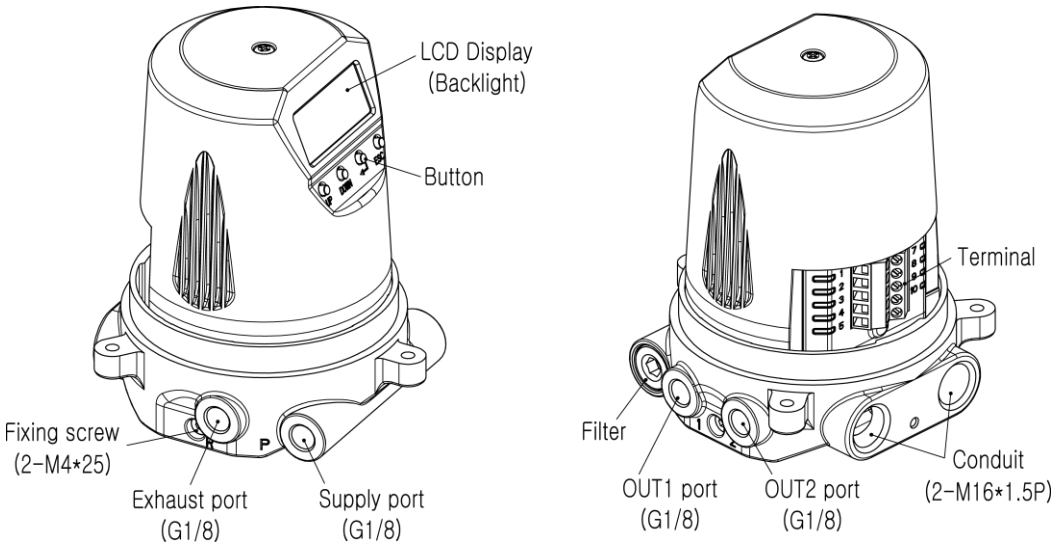

Fig. 2-2: TMP-3000 Exterior Parts and Description (Base Cover Removed)

2.9 Filter Cleaning

TMP-3000 has a built-in filter that filters foreign substances from the outside. During maintenance, please observe the followings to clean the filter.

- All input signals to valves, actuators, and other peripherals, pneumatics, etc. must be completely stopped.
- Disconnect the control valve from the system with a bypass valve or other similar device to prevent shutdown of the entire system.
- Make sure there is no air pressure in the actuator.
- Filter size is 5 micron.
- Please assemble carefully after disassembly and reassembly..
- Tool required for disassembly is 6mm wrench.

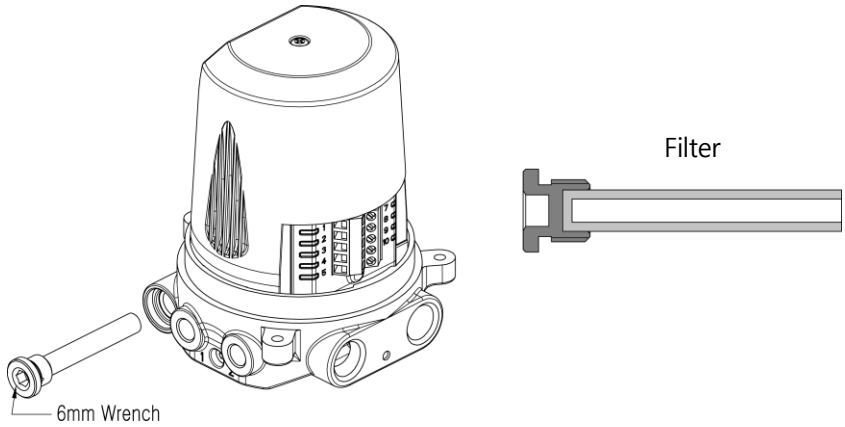

Fig. 2-3: TMP-3000 Filter Cleaning

2.10 Dimensions

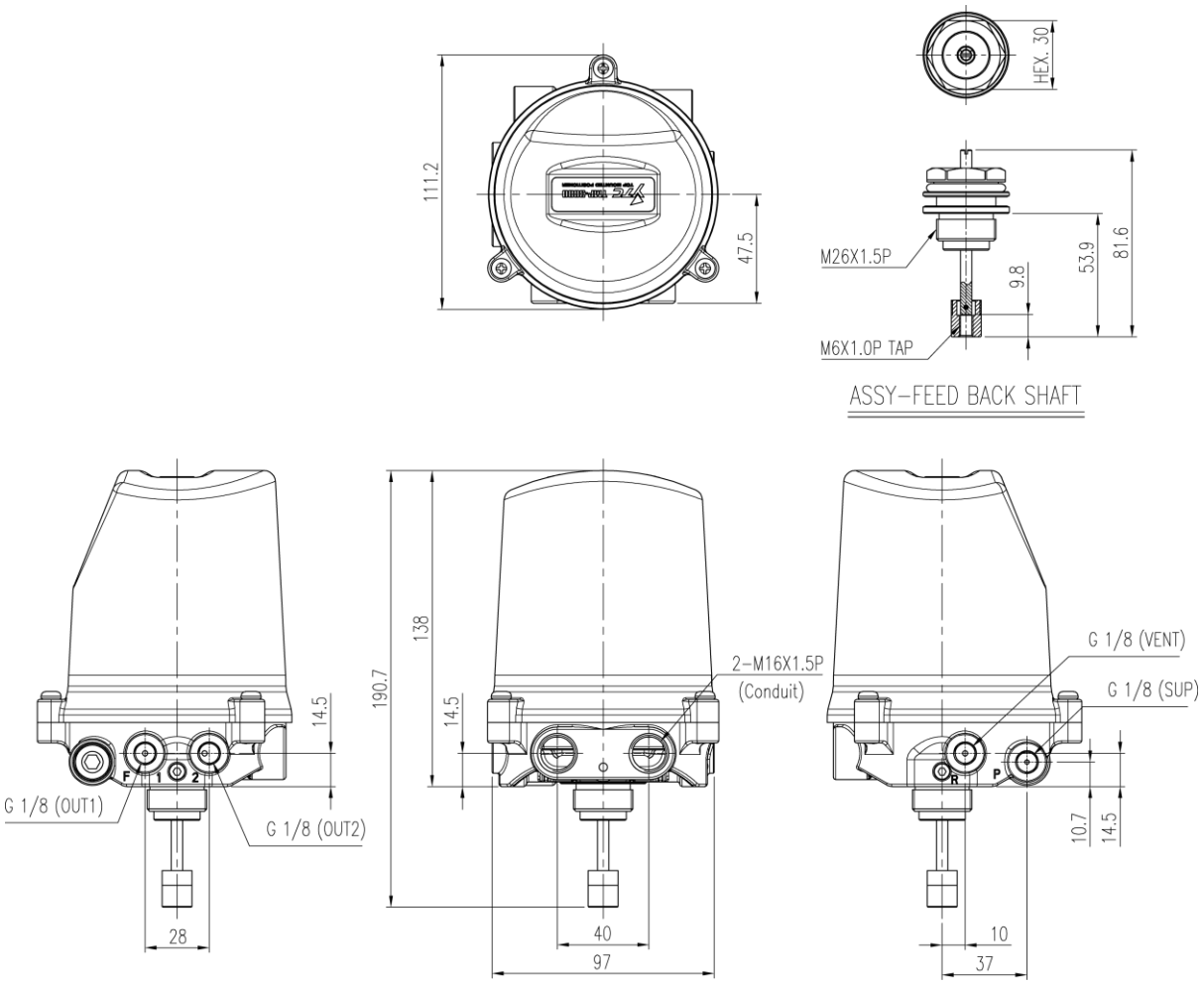

Fig. 2-4: TMP-3000 Dimensions

3. Installation

3.1 Safety

When installing the positioner, be sure to read and follow the safety instructions below.

- Ensure that all input signals to the valves, actuators and other peripherals, pneumatics, etc. are completely shut off and there is no pneumatic pressure left in the actuator.
- Disconnect the control valve from the system with a bypass valve or other similar device to prevent shutdown of the entire system.

3.2 Tools required for Installation

- Hexagonal wrench set
- (+) (-) Screw driver
- Spanner

3.3 TMP-3000 Installation

The TMP-3000 is used for linear motion valves. It is used for the angle valve in which the actuator stem is moved up and down linearly by using the spring return type diaphragm actuator or by using the piston actuator.

3.3.1 TMP-3000 Installation Example

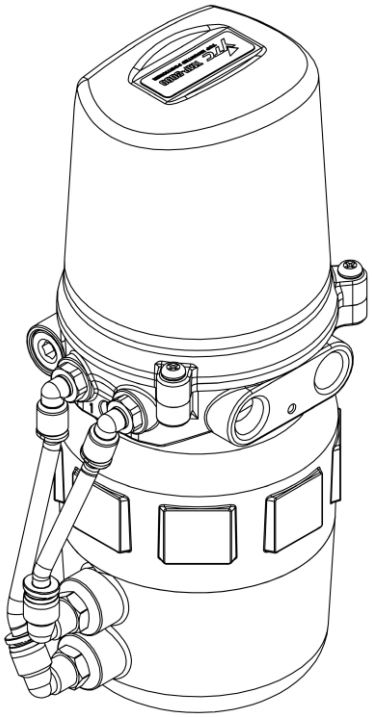

Fig. 3-1: TMP-3000 Installation Example

Make sure you have the following parts before proceeding with the installation.

- Positioner
- Feedback Shaft

3.3.2 Installing

1. Check actuator stroke (max 40mm) and screw size (M26X1.5P) on actuator. Please check if it is possible to assemble with the feedback shaft provided. The screw at the bottom of the feedback shaft is M6 with 8mm depth.

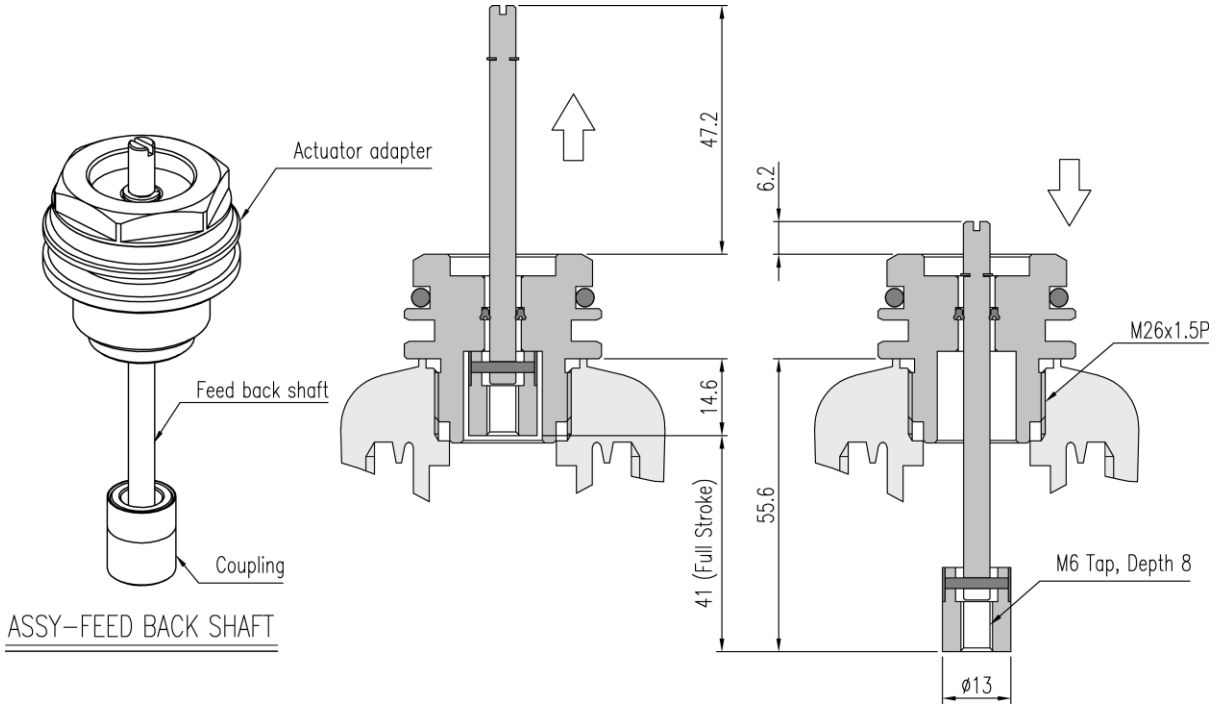

Fig. 3-2: TMP-3000 Feedback Shaft

2. Assemble the Actuator adapter on top of the actuator.

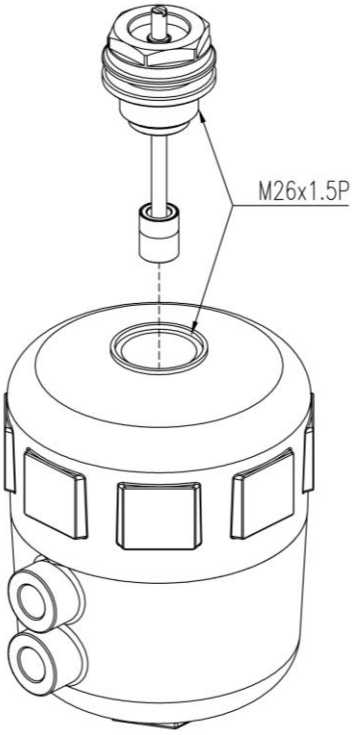

Fig. 3-3: TMP-3000 Feedback Shaft Assembly

3. Using a flat head screwdriver, tighten the M6x1.0P male thread of the actuator to the female thread of the coupling at the top end of the feedback shaft.

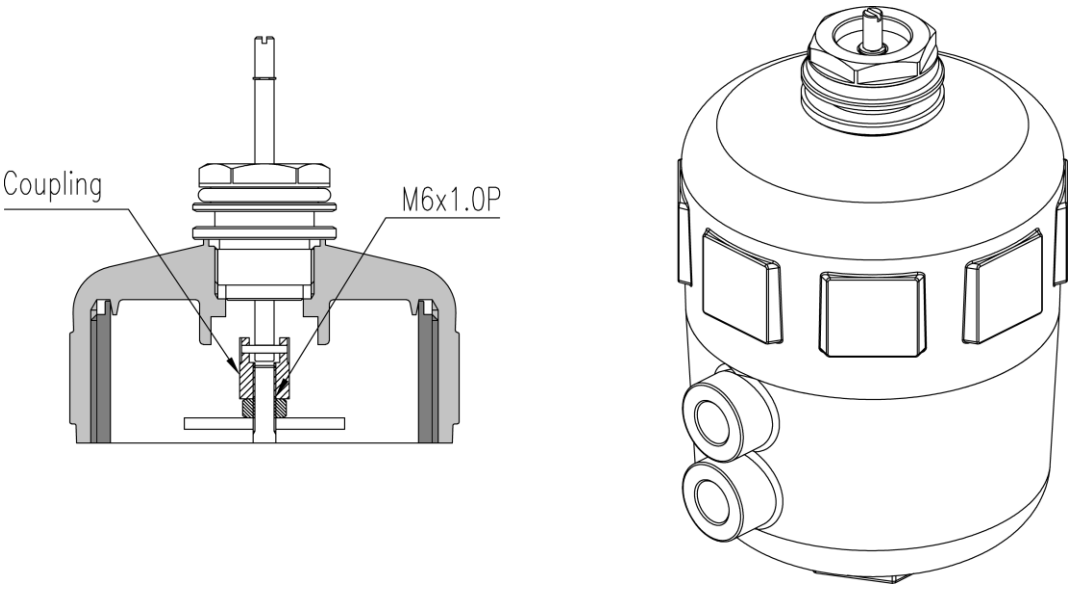

Fig. 3-4: TMP-3000 Fixing the Stem

4. Insert the TMP-3000 main body into the assembled actuator adapter, rotate it in the desired direction and tighten both wrench bolts. (The head of the wrench bolt is 3mm.)

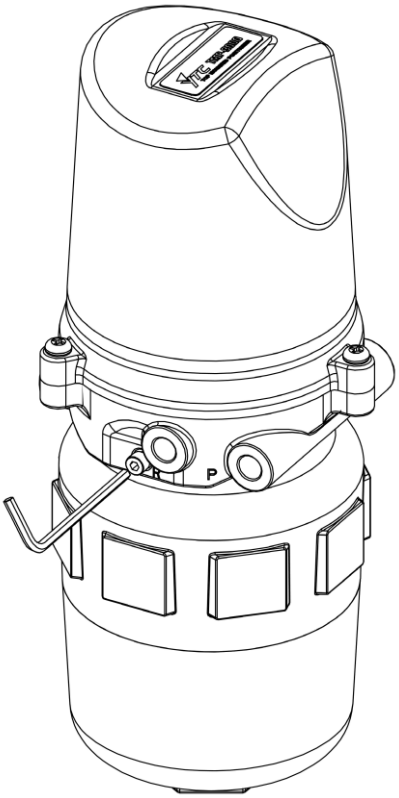

Fig. 3-5: TMP-3000 Fixing the Body

3.3.3 Warning

After installation, temporarily connect the pneumatic regulator directly to the actuator and operate the valve from 0 to 100% stroke. At 0% and 100%, check if feedback shaft works smoothly.

4. Pneumatic Connections

4.1 Safety

- Be careful to select pneumatic compressors and pneumatic systems so that moisture, oil, foreign substances, etc. are not mixed in the pneumatic pressure used in the positioner.
- Prevent the entry of moisture, oil and foreign substances by attaching a separate filter to the positioner's supply port or applying a pneumatic regulator (such as YT-200) with a built-in filter.
- We have not tested the operation of the positioner using gases other than clean normal air. If you have additional questions, please contact us.

4.2 Supply Pressure Condition

- Use dry air with a dew point of at least 10 ° C below the ambient temperature dew point.
- Filter out foreign substances with 5 micron filter.
- Do not include oil or lubricant in the air.
- Must comply with ISO 8573-1 or ISA 7.0.01.
- This positioner is intended for use in the pneumatic range of 0.05 to 0.7 MPa (0.05 to 7 bar). Do not use it outside this range.
- Set the pressure output from the regulator to 10% higher than the operating pressure of the actuator or the spring range pressure of the actuator.

4.3 Piping Condition

- Remove any foreign substances inside the piping before installing for piping.
- The piping must be free of any pressed or damaged parts.
- The piping of the positioner and actuator connection at the time of piping should be free from leakage.
  Hunting occurs when there is a leakage, which also shortens product life.
- Use the one-touch fitting provided by our company to prevent leakage of piping.

4.4 Piping Connection of the Positioner and Actuator

4.4.1 Single Acting Actuator

Our positioner is set to use only OUT1 port for single acting type. Therefore, when using a single acting spring return type actuator, connect the OUT1 port to the actuator's pneumatic port.

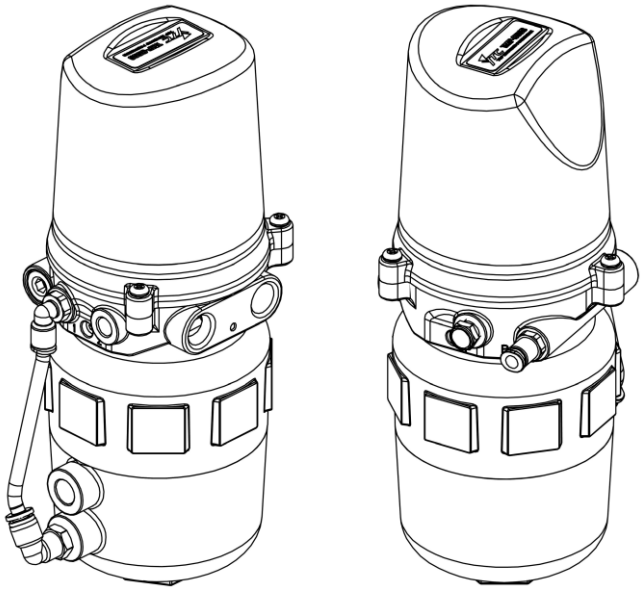

Fig. 4-1: Single Acting Actuator Pneumatic Piping Example

4.4.2 Double Acting Actuator

For double acting actuators, both OUT1 and OUT2 ports are used. If the current input signal is increased, the air pressure is output from the OUT1 port. Refer to below and install the piping.

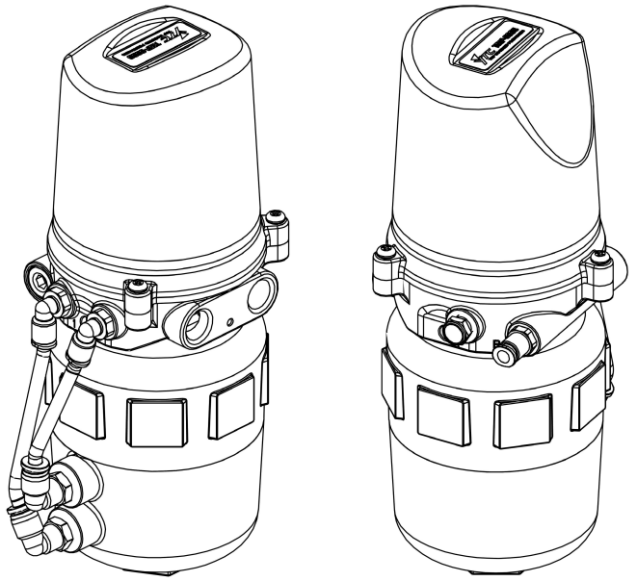

Fig. 4-2: Double Acting Actuator Pneumatic Piping Example

5. Power Connection

5.1 Warning

- Make sure power is off before connecting to the terminal.
- The operating power supply uses DC 24V and the input signal uses one of 4 ~ 20mA, 0 ~ 20mA, 0 ~ 5V, 0 ~ 10V.
- If PTM option is available, supply 9 ~ 28V DC power separately.
  The maximum voltage must not exceed 30V.
- Do not install cables near noise-generating equipment such as high-capacity transformers or motors.

5.2 Terminal Connections

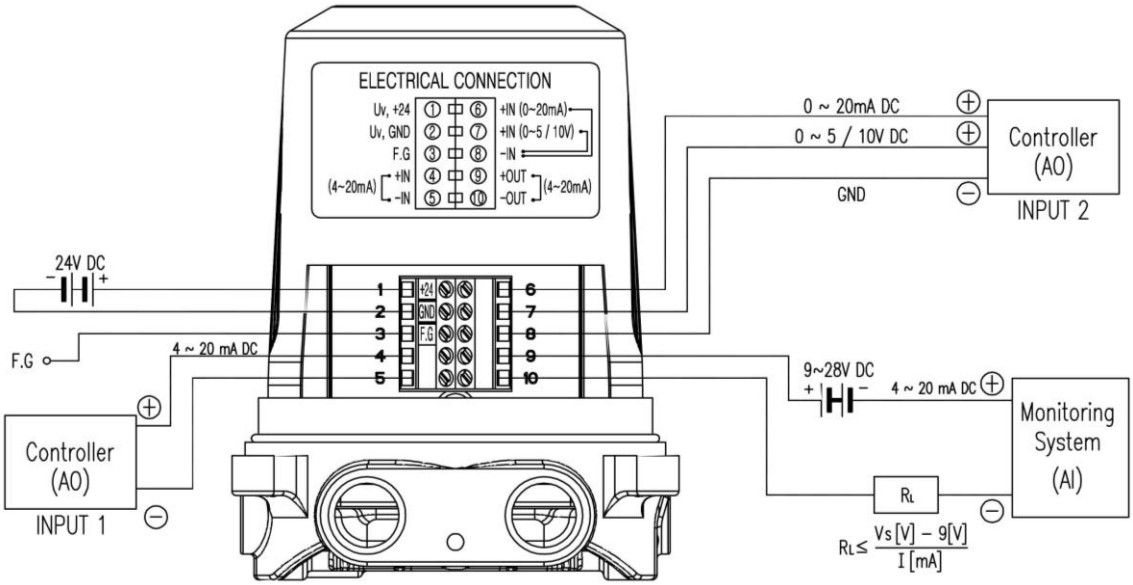

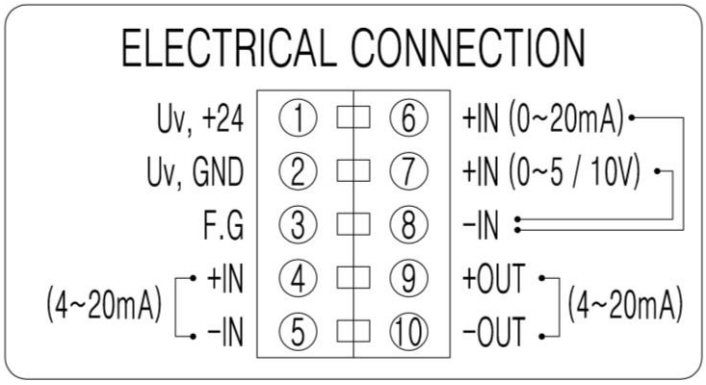

Fig. 5-1: TMP-3000's Terminal

6. Auto Calibration and How to Operate

6.1 Warning

This operation will move the valve and actuator so that the valve must be disconnected from the entire system before auto-calibration to ensure that the entire process is not affected.

6.2 Button Description

There are total of four buttons in the positioner. You can use it to implement various functions.

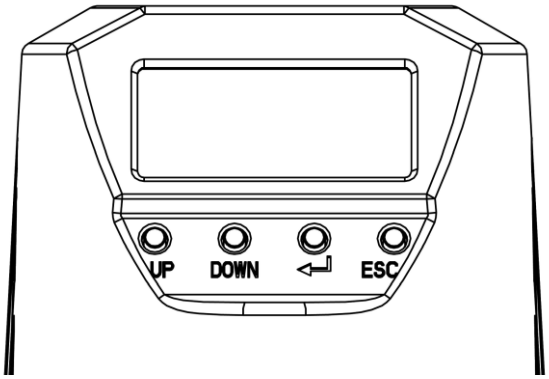

Fig. 6-1: <UP> & <DOWN >: Used to change parameter values in menu when moving to other menu
<ENTER>: Used to enter the main menu or submenu, to save parameter values
<ESC>: Used to return to the previous menu one level from the current menu

6.3 Run Mode (RUN)

When the current is input to the positioner, the RUN mode is displayed on the LCD window after about 0.5 second as shown in the figure. "RUN" indicates that the positioner is adjusting the valve stroke according to the current signal (normally 4 ~ 20mA DC) received from the outside. The lower part of the figure, "PV", is an abbreviation of the valve's process value, and the upper "30.0%" indicates that the current valve opening is 30%.

There are 5 types to display in "RUN" mode as follows.

1. RUN PV : Process Value – Valve Stoke %
2. RUN SV (%) : Set Value – Input Signal, 0~100%
3. RUN SV (mA) : Set Value – Input Signal, 4~20mA, 0~20mA, 0~5V, 0~10V
4. RUN MV : Manipulate Value – Torque motor control value, Digit
5. RUN ERR : Error – Difference between SV and PV, %

To change the RUN PV to another RUN mode, hold down the <ESC> button and press the <UP> or <DOWN> button to display the above five modes sequentially each time you press.

To return to the original RUN PV mode, press the <ECS> button.

6.4 Auto Calibration Mode (AUTO CAL)

The auto-calibration function makes it easy to carry out the calibration. It takes about 2 ~ 3 minutes to complete Auto-Calibration, and the time required may vary depending on the size of the actuator. There are two types of Auto Calibration as below.

	Zero	End	PT,ESR,PR	RA / DA
AUTO 1	O	O	X	X
AUTO 2	O	O	O	O

Run AUTO2 if it is first time you have installed the positioner on the actuator.

6.4.1 Auto 1 Calibration Mode (AUTO1)

AUTO1 resets only the zero point and the end point. Auto calibration is performed without changing any other previously set parameter values. Usually used when the positioner that has already been calibrated has only slightly changed position.

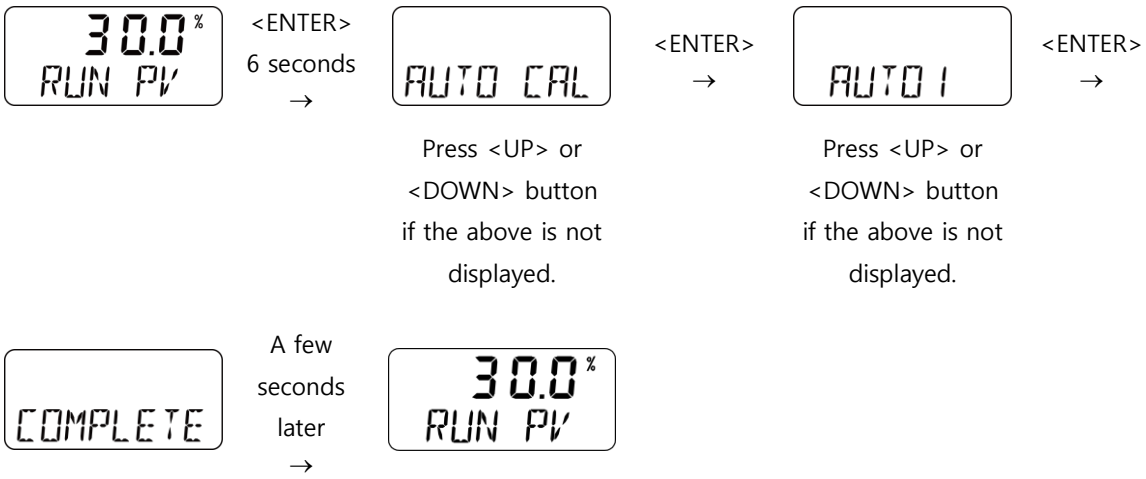

6.4.2 Auto 2 Calibration Mode (AUTO2)

AUTO2 resets all parameters required for valve operation. If this is the first time you are installing the positioner on a valve, perform an AUTO2 calibration.

AUTO CAL <ENTER> → AUTO2 <ENTER> → COMPLETE A few seconds later →

Press <UP> or <DOWN> button if the above is not displayed.

30.0% RUN PV

6.5 Manual Mode (MANUAL)

Manual mode is used to manually raise or lower the valve stem. In the manual mode, the positioner does not control the valve according to the current signal inputted from the outside but the stroke of the valve can be adjusted only by the operation of the control button of the positioner. Move the stem up and down to make it visible. If you press <ESC> twice to return to RUN mode, the positioner is controlled by the input current signal again.

30.0% RUN PV <ENTER> 6 seconds → MANUAL <ENTER> → 30.0% *MAN <UP>/<DOWN> →

Press <UP> or <DOWN> button if the above is not displayed.

50.0% *MAN UP <ESC> → MANUAL <ESC> → 30.0% RUN PV

6.6 Parameter Mode (PARAM)

By performing auto-calibration, almost all valve actuator control can be performed optimally. However, in some cases, it may be difficult to optimally set the valve actuators for some special cases or auto-calibration when operating under special conditions.
At this time, you can adjust the parameter value to solve the problem.

If you change the parameter value with the <UP><DOWN> button, the instantly changed value is applied to the positioner control. When the desired state is reached, you must press the <ENTER> button to save the value.

Below are the list of features which could be set from Parameter mode.

1) Dead-Zone (dEAdZONE)
2) PT value (PT1, PT2)
3) ESR value (ESR1, ESR2)
4) PR value (PR1, PR2)
5) PERIOD TIME (PERIOd_)

6.6.1 Dead-Zone (dEAdZONE)

The dead zone is the size of the tolerable Error%. If the packing friction is so high that hunting or oscillations occur continuously, you can stabilize the valve by forming dead zones.

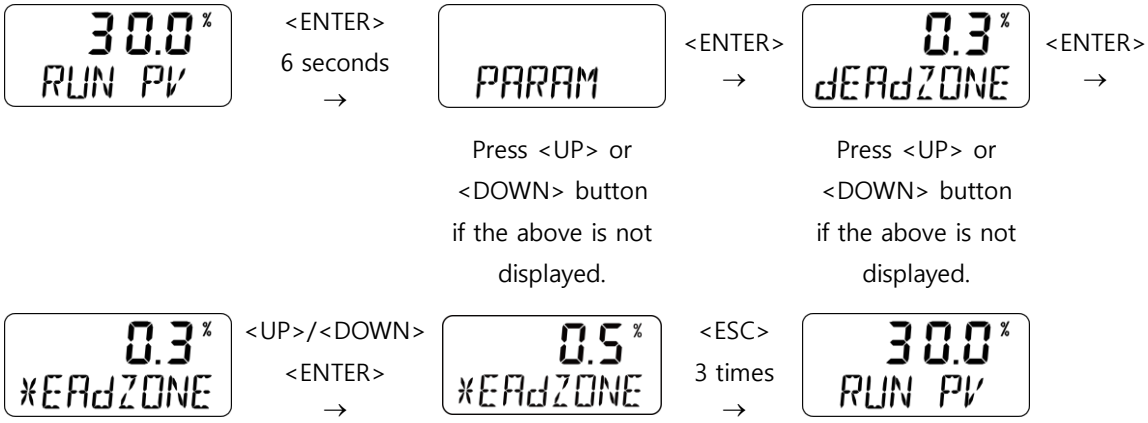

6.6.2 PT1, PT2 Values

The PT control value is a parameter that indicates the minimum length of the internal signal to be controlled by the valve. PT1 indicates the PT control value when the input signal is increased and PT2 indicates the PT control value when the input signal is decreased. It is basically set at auto-calibration.

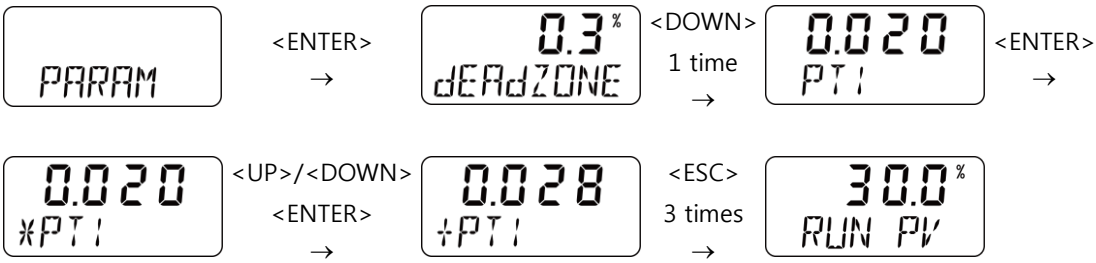

6.6.3 ESR1, ESR2 Values

The ESR control value is a range value that shortens the output control with the minimum period set by the PT value within the error range. If the value is small, the

speed of finding the target value is fast and overshooting may occur. On the other hand, if the value is large, the speed of finding the target value is slowed down, but the occurrence of overshooting can be suppressed.

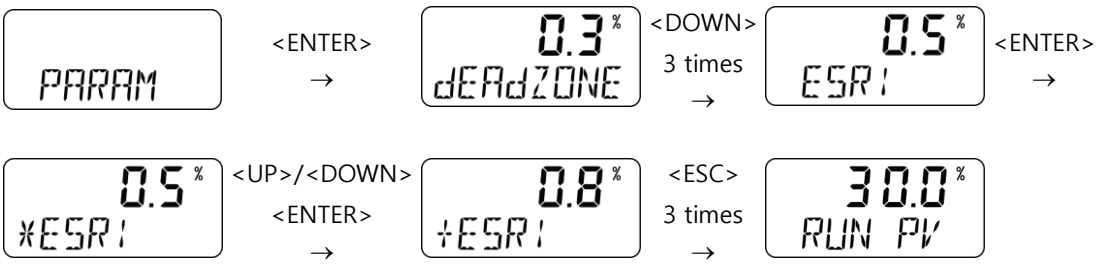

6.6.4 PR1, PR2 Values

The PR value is the proportional control value for the speed to compensate for the error that occurs during the delay time between the control signal and actual valve stem operation. Large values can cause oscillations.

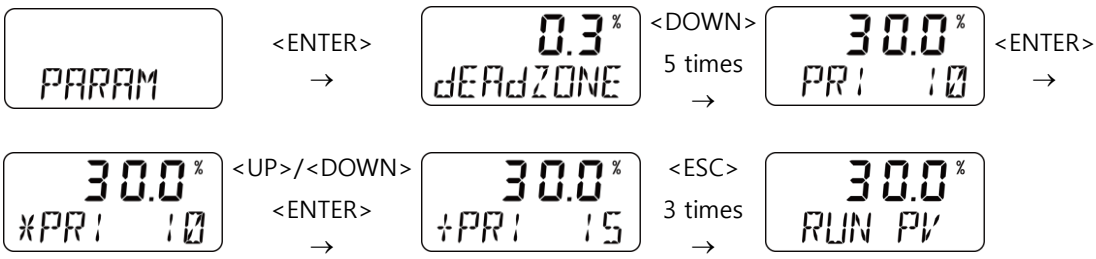

6.6.5 PERIOD Time (PERIOD)

It means the control cycle inside the positioner. Basically, it checks the current position and signal every 30 msec to control the valve.

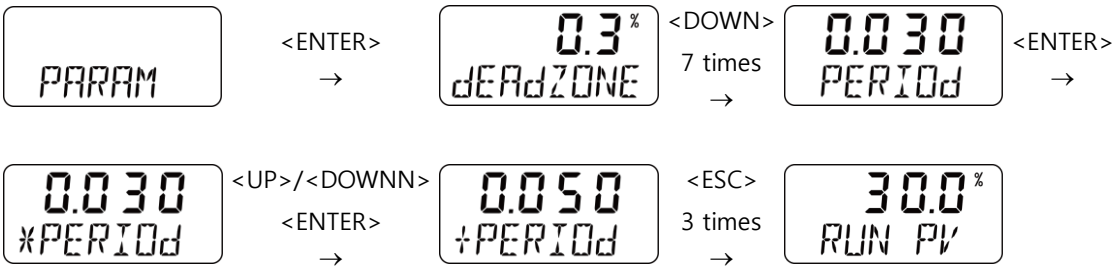

6.7 Hand Calibration Mode (CALIb)

Hand calibration mode is used when zero point and end point need to be reset to use only some intervals in the whole set stroke automatically after executing auto calibration.

6.7.1 Input Signal Selection (SEL IN)

The input signal should be 0 ~ 20/4 ~ 20mA or 0 ~ 5 / 10V and the input signal must be selected after wiring according to the desired input signal. Input signal range according to input signal setting value is as follows.

Parameter Value	Input Signal
0	4 ~ 20mA
1	0 ~ 20mA
2	0 ~ 10V
3	0 ~ 5V

6.7.2 Zero-Point (PV_ZERO) and End-Point (PV_END)

PV_ZERO mode is the mode to change the zero point of the valve, and PV_END is the mode to change the end point.

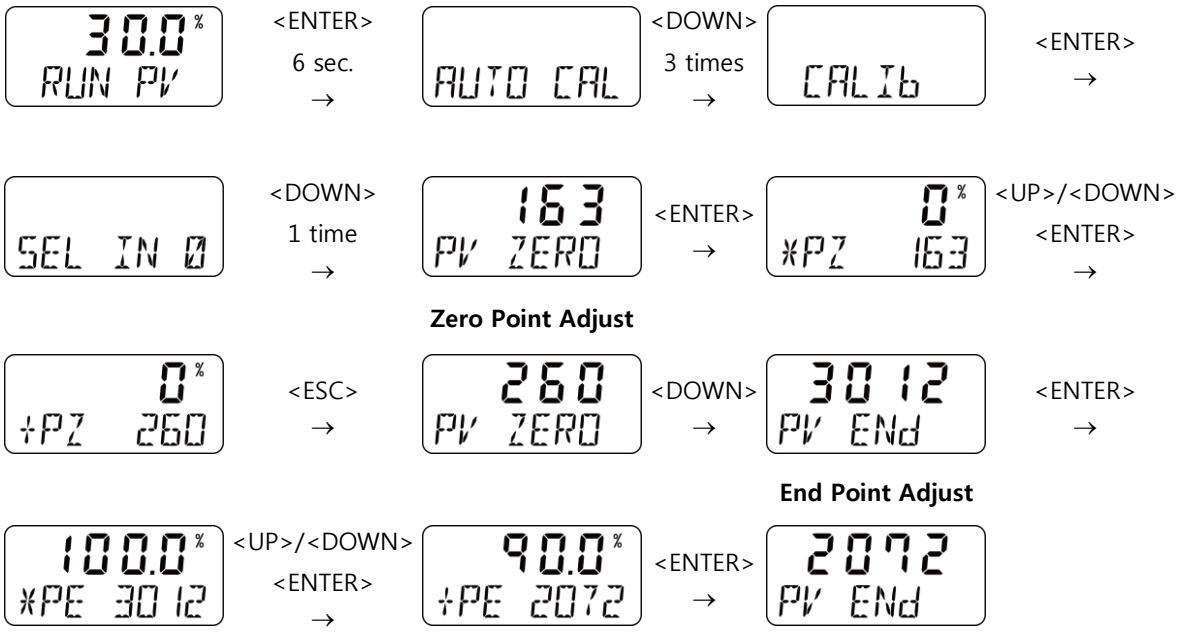

6.7.3 Zero-Point (TR_ZERO) and End-Point (TR_END)

TR_ZERO is the zero point of the feedback output signal, and TR_END is the mode in which the end point can be changed. It is used when the feedback output signal is not the same as the actual valve opening or when the output signal is unstable and needs to be readjusted. Equipment such as an ammeter to see the feedback signal is required, and the wiring should be connected as shown in the table of contents 5.2 Connection of terminals.

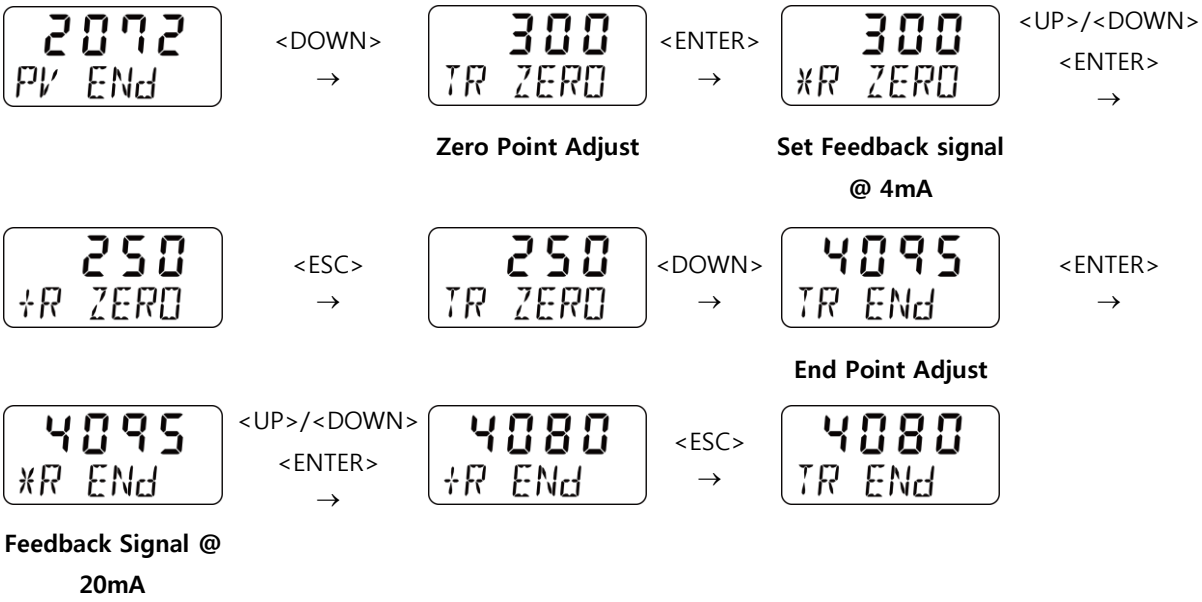

6.7.4 Normal/Reverse Feedback Signal (TR NORM / REVS)

The feedback signal of the positioner can be output the same as the actual opening or vice versa.

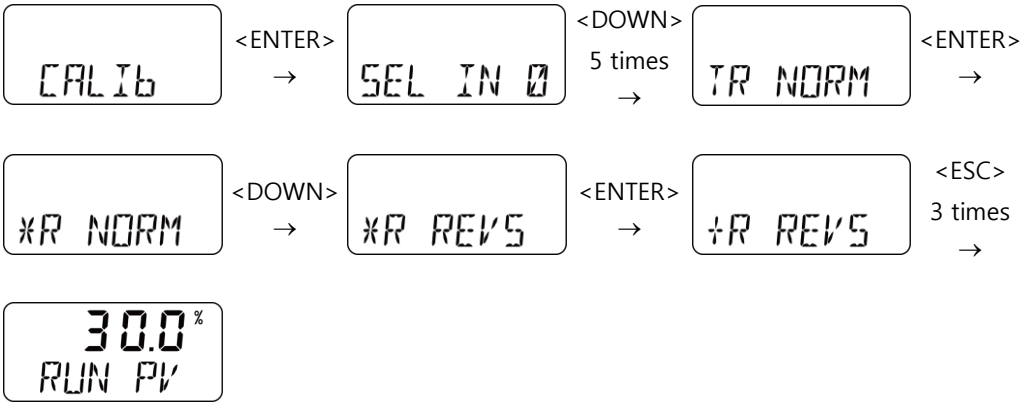

6.8 Valve Mode (VALVE)

From Valve Mode:

- You can change the operating direction of the valve (ACT RA / Da),
- You can change the flow characteristic mode (CHAR),
- You can change user characteristics mode (USER SET),
- You can set the direct acting actuator seal mode (TSHUT OP),
- You can set the dynamic actuator airtight mode (TSHUT CL),
- You can set the user zero setting mode (CST ZERO),
- You can set the user end setting mode (CST ENd),
- You can set the SINGLE / DOUBLE setting mode,

6.8.1 Acting Adjustment (ACT RA / dA)

The operating direction of the valve can be changed to Direct Action (D / A) or Reverse Action (R / A).

30.0 % RUN PV <ENTER> 6 sec. → AUTO CAL <DOWN> 4 times → VALVE <ENTER> →

ACT RA <ENTER> → *ACT RA <UP>/<DOWN> <ENTER> → +ACT dA <ESC> 3 times →

30.0 % RUN PV

6.8.2 Characteristic Adjustment (CHAR)

You can change the flow characteristics curve mode of the valve. You can choose from three options: Linear (LIN), user setting (USR), Equal percentage (EQ), and Quick open (QO).

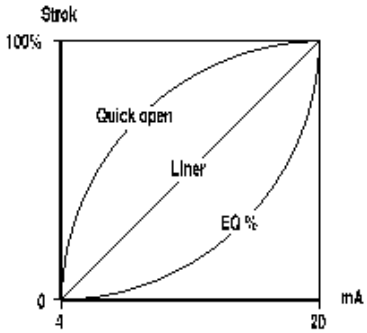

VALVE <ENTER> → ACT RA <DOWN> → CHAR LIN <ENTER> →

→ *HAR LIN <UP>/<DOWN> <ENTER> → +HAR QO → <ESC> 3 times 30.0 % RUN PV

6.8.3 User defining flow Characteristics (USER SET)

In case positioner requires a specific characteristic, the valve characteristic curve can be made by selecting up to 18 points of the curve. This function can be activated by selecting "CHAR USR" mode of above 6.8.2 Valve flow Characteristic Adjustment (CHAR).

1) 5 point setting

VALVE → <ENTER> → USER SET → <ENTER> → 5 POINT → <ENTER> →

Press <UP> or <DOWN> button if the above is not displayed.

0% *P 0 SET → <UP>/<DOWN> <ENTER> or <ENTER> → 25.00% *P 1 SET → <UP>/<DOWN> <ENTER> or <ENTER> → 50.00% *P 2 SET → <UP>/<DOWN> <ENTER> or <ENTER> →

75.00% *P 3 SET → <UP>/<DOWN> <ENTER> or <ENTER> → 100.0% *P 4 SET → <UP>/<DOWN> <ENTER> or <ENTER> → USER SET → <ESC> 2 times →

30.0% RUN PV

2) 21 point setting

VALVE → <ENTER> → USER SET → <ENTER> → 21 POINT → <ENTER> →

Press <UP> or <DOWN> button if the above is not displayed.

Press <UP> or <DOWN> button if the above is not displayed.

0% *P 0 SET → <UP>/<DOWN> <ENTER> or <ENTER> → 5.00% *P 1 SET → **Repeat step if necessary** 95.00% *P 19 SET → <UP>/<DOWN> <ENTER> or <ENTER> →

100.0% *P20 SET → <UP>/<DOWN> <ENTER> or <ENTER> → USER SET → <ESC> 2 times → 30.0% RUN PV

6.8.4 Tight Shut Open (TSHUT OP)

If the current input signal is higher than the specified TSHUT UP (Tight shut open) value, the regulator set pressure will be input to the actuator as it is and the valve will be fully open with the larger actuator force.

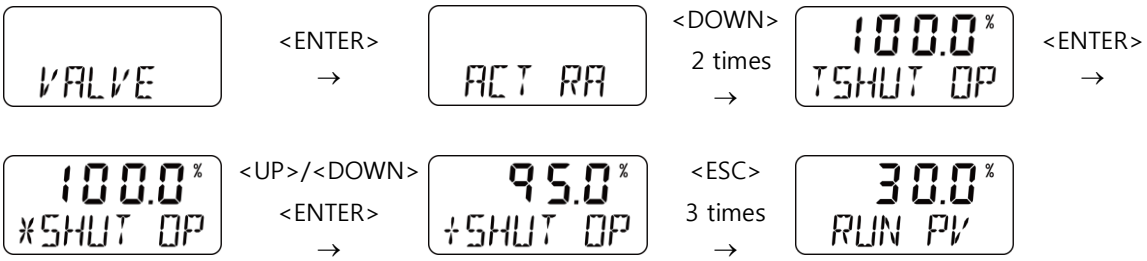

6.8.5 Tight Shut Close (TSHUT CL)

When the current input signal falls below the specified TSHUT CL (tight shut close) value, the regulator set pressure is input to the actuator as it is, and the valve is tightly closed by a larger actuator force to prevent leakage of the valve.

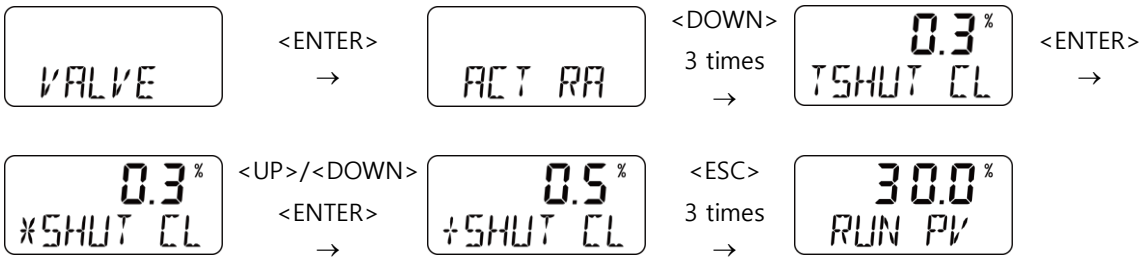

6.8.6 Custom Zero Setting Mode (CST ZERO)

CST ZERO is the value of the analog input signal corresponding to the start point of set value for Split Range Control. It is the value of analog input signal (4 ~ 20mA, 0 ~ 20mA, 0 ~ 5V, 0 ~ 10V) which can be set by the user. For example, if the analog input signal is selected (4 to 20mA) and CST ZERO is set to 50% CST END at 100%, the valve opening will be 0 to 100% when the input signal is in the range of 12 to 20mA.

The deviation of the current between the zero point and the end point should be at least 25%.

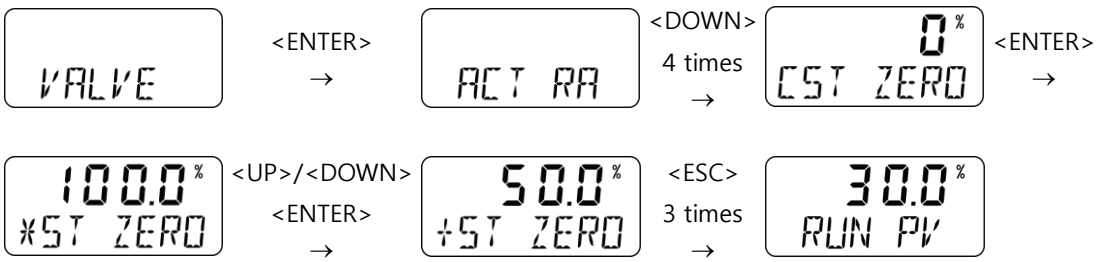

6.8.7 Custom End Setting Mode (CST ENd)

CST ENd is the value of analog input signal corresponding to the end point of Set Value for Split Range Control and is the percentage value of analog input signal (4 ~ 20mA, 0 ~ 20mA, 0 ~ 5V, 0 ~ 10V) which can be set by the user. For example, if the analog input signal is selected (4 to 20mA) and CST ZERO is set to 0% and CST END is set to 50%, the valve opening will be 0 to 100% when the input signal is in the 4 to 12mA range.

The deviation of the current between the zero point and the end point should be at least 25%.

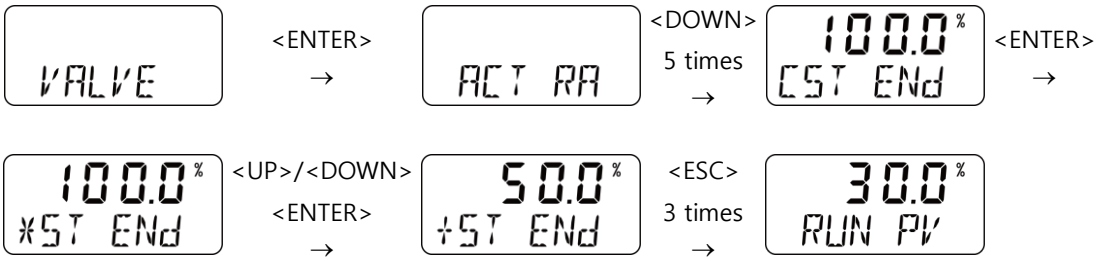

6.8.8 Single and Double Acting Adjustment (SINGLE / dOUBLE)

You can change the single and double acting settings of the actuator.

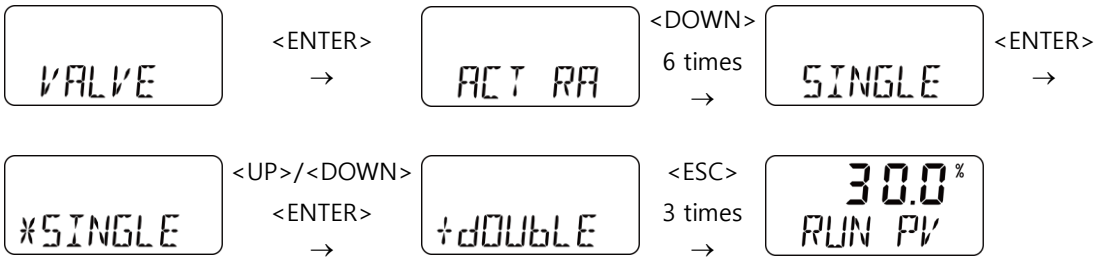

6.9 INFO Mode (INFO)

INFO mode provides various information of the positioner.

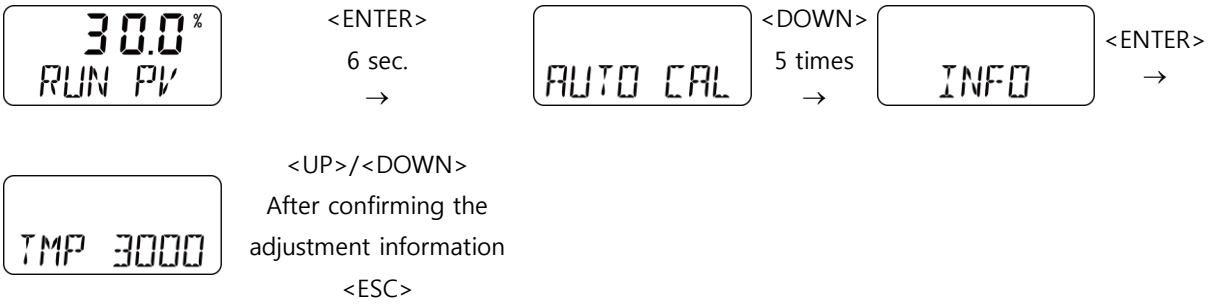

Display Menu	Descriptions
TMP-3000	Positioner Model Name
VERSION	Main Firmware Version
FULL_OP	Valve's Full Open Time (sec)
FULL_CL	Valve's Full Close Time (sec)
VM NORM / VM REVS / VM dIZ	VM NORM : View Mode Normal means 0% at 4mA and 100% at 20mA. VM REVS : It means View Mode Reverse, 100% at 4mA and 0% at 20mA.. VM dIZ : View Mode Digital means to display the raw data of the position value converted from the position sensor as digit value. You can change it by pressing <ENTER>.
W LOCK / W UNLOCK	You can change all parameter values (W UNLOCK), including auto-calibration function, or lock them unalterable (W LOCK). You can change it by pressing <ENTER>.

7. Error and Warning Code

If there is something wrong with the product, you can check the error and warning code in VIEW mode.

7.1 Error Code (Error code)

This is displayed when the positioner cannot be controlled or malfunctions or accuracy may be improved when it occurs.

Error Code	Contents and cause of error	Measure
CHK AIR	➢ Valve does not move even though the positioner gives Full Open signal during auto calibration. ➢ When an error occurs, Auto Calibration stops and this message is immediately displayed on the LCD window.	➢ Make sure air pressure is being supplied to the positioner properly.
RNG ERR	➢ If the operation length of the feedback lever is too small due to mounting failure. ➢ When an error occurs, Auto Calibration stops and this message is immediately displayed on the LCD window.	➢ Check that the feedback shaft is working smoothly.
CHK LEAK	➢ If the valve continues to move even with the stop signal applied	➢ Check is there is a leakage in piping area.
ERR STRK	➢ When the stroke time of the whole section exceeds 5 minutes in auto-calibration	➢ Make sure air pressure is being supplied to the positioner properly. ➢ Make sure that the valve and actuator have normal friction.
OVER CUR	➢ If 23mA or above current is detected on the demand input terminal, LCD texts will blink and an error message is displayed ➢ Button operation cannot be performed while error message has been displayed. ➢ This code has been applied since Firmware version 1.6.03.	➢ Check the connection status of the demand input (wrong wiring, overcurrent input etc.).

OVER VLT	➢ If voltage higher than 11V is detected on the demand input terminal, LCD texts will blink and an error message is displayed. ➢ Button operation cannot be performed while error message has been displayed. ➢ This code has been applied since Firmware version 1.6.03.	➢ Check the connection status of the demand input (wrong wiring, overcurrent input etc.)

8. LCD Operating Order

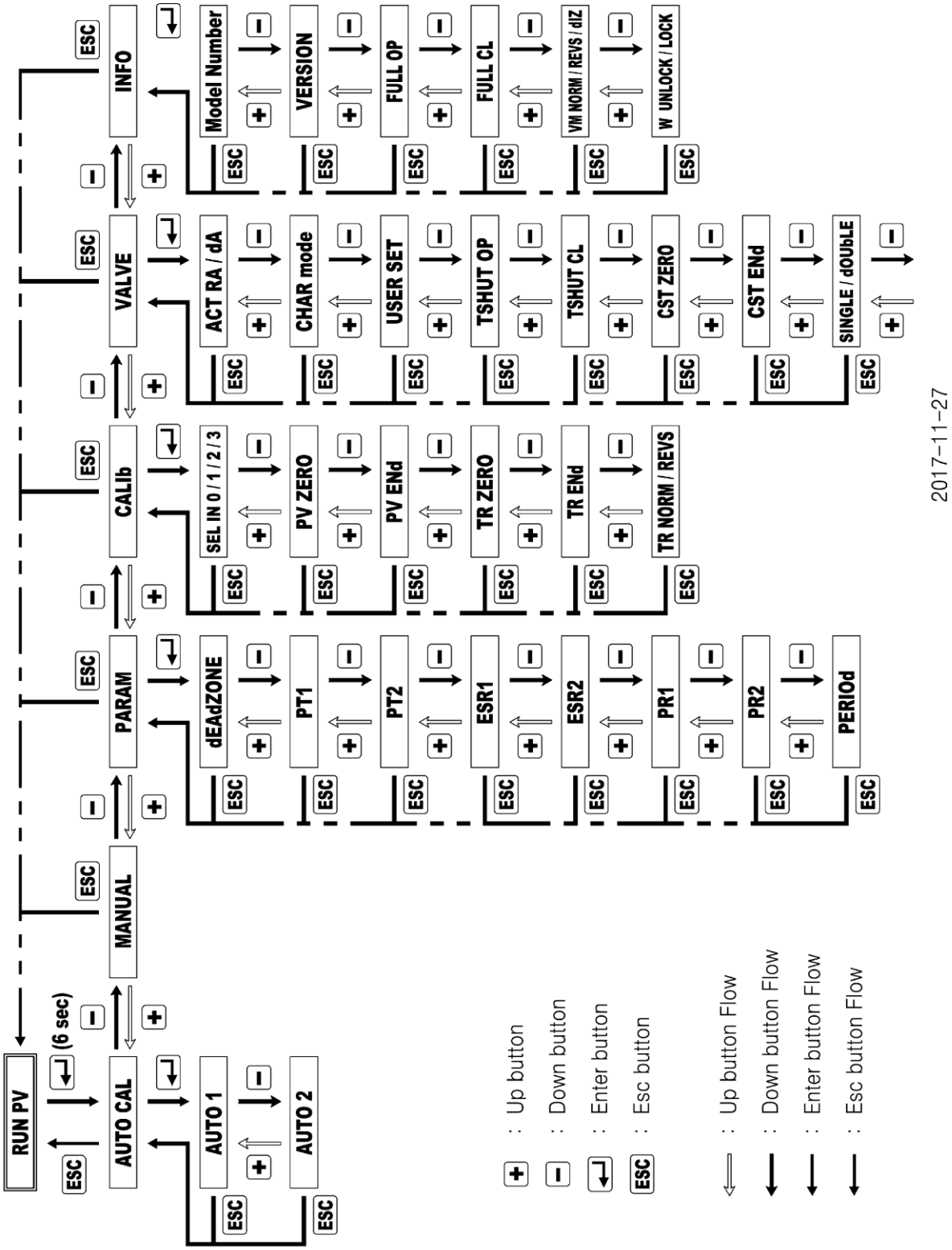

Manufacturer: Young Tech Co.,Ltd

Address : 81, Hwanggeum-ro 89 beon-gil, Yangchon-eup, Gimpo-si, Gyeonggi-do, South Korea
Postal Code : 10048
Telephone : 031-986-8545
FAX : 070-4170-4927
E-mail : ytc.sales@rotork.com
Website : http://www.ytc.co.kr

Issued : 2018-09-17

Copyright © **Young Tech Co., Ltd.** All Rights Reserved.